The Institute of Space and Astronautical Science
Report SP No.14, December 2000

Telescope Concept Proposed for HII/L2

By

Izumi MIKAMI*, Tsuyoshi ISHIKAWA*, Yutaka EZAKI*,
Toshio MATSUMOTO†, and Takao NAKAGAWA†

(November 1, 2000)

Abstract: The HII/L2 project is to launch a 3.5m telescope, which will be cooled down to 4.5K in space, in order to observe an early universe, z∼2 or more, in the mid- and far-infrared wavelengths from the Lagrange 2 point. Although this project has just started its concept examination phase, some range of technical feasibility study has been carried out by the HII/L2 Working Group.

1. INTRODUCTION

The HII/L2 Telescope is a new technology space telescope which will have a primary mirror with a diameter of 3.5m. The telescope will be cooled down to 4.5K by its cooling system in space after launch. It will be supported by the spacecraft which will be thermally insulated from the telescope. The telescope shall be diffraction limited at wavelength of 5 μm and longer, and should maintain its performance for two to three hours in presence of the micro vibration jitters and the pointing error induced by the spacecraft. The total mass of the spacecraft and all the mission instruments should be 4 metric ton or less, because of the limited capacity of the HIIA rocket.

This paper describes proposed telescope concept for the HII/L2 project based on the preliminary study carried out so far mainly from the technical feasibility view point.

2. DESIGN GOALS

The design goals are summarized in Table 1. In order to represent the diffraction limited performance of the HII/L2 telescope, the Strehl Ratio of 0.8 or higher at the wavelengths of 5 μm and longer is preliminarily specified.

* Mitsubishi Electric Corporation, 8-1-1, Tsukaguchi–honmachi, Amagasaki city 661-8661, Japan; i.mikami@cew.melco.co.jp, t.ishika@cew.melco.co.jp, ezaki@cew.melco.co.jp

† The Institute of Space & Astronautical Science (ISAS), 3-1-1 Yoshinodai, Sagamihara, Kanagawa 229-8510, Japan; matsumo@ir.isas.ac.jp, nakagawa@ir.isas.ac.jp

Table 1: Design Goals

Parameter	Value	Note
Observation Wavelength Range	5μm - 200μm	
	2μm - 5μm	optional
Focus Mode	Bent Cassegrain	
Field of View	$16' \times 16'$	@ 200μm
	$6.1' \times 6.1'$	@ 5μm
	$\phi 6'$	@ 2μm, optional
Strehl Ratio	0.8	@ 200μm
	0.8	@ 5μm
	T.B.D.	@ 2μm, optional
Primary Mirror	ϕ3400mm or more	Clear Aperture
	ϕ3500mm	Outer Diameter
Telescope Mass	less than 4ton	Preliminary
	including Spacecraft	
Max. Bus Power Consumption	less than 2 kW	Preliminary
Cooling Conditions	4.5 K	during Observation
	300 K	at Launch
Natural Frequency	T.B.D.	
Life	longer than 5 years	Preliminary

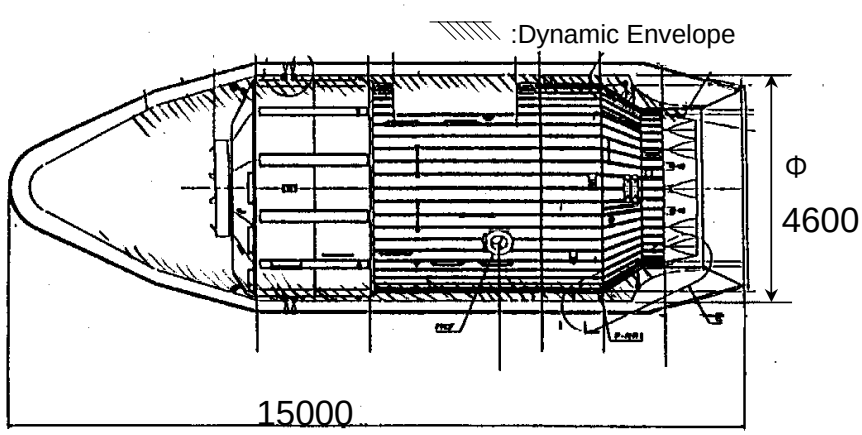

Fig. 1: Applicable Fairing and Dynamic Envelope

3. OTHER DESIGN CONDITIONS

The dynamic envelope of the applicable fairing is shown in Figure 1. This fairing is under development in Japan for other purposes, which will be the biggest and available by the time of HII/L2 launch. The load conditions to be applied to the HII/L2 telescope are clearly specified by the HIIA rocket side in terms of the sinusoidal vibration (5 to 100Hz), the combined loads at the main engine cut off, the random vibration mainly due to the sound pressure, the shock, and so on. The details of the load conditions can be found in the HIIA Rocket User's Manual (National Space Development Agency of Japan 1997).

4. OPTICAL SYSTEM CONFIGURATION

The optical system configuration is the starting point of the telescope, because this governs the overall performance of the ideal condition and the space factor.

4.1 Optical Configuration and Parameters

The Ritchey-Cretien optical system is selected to attain the wide field of view at the second focus. The major parameters of the proposed optical system are shown in Figure 2. As the F ratio of the primary mirror, we have selected 1.25 which is not as fast as the state-of-the-art allows. However, this moderate speed is preferred to expect a less performance degradation against the setting error of the primary and secondary mirrors.

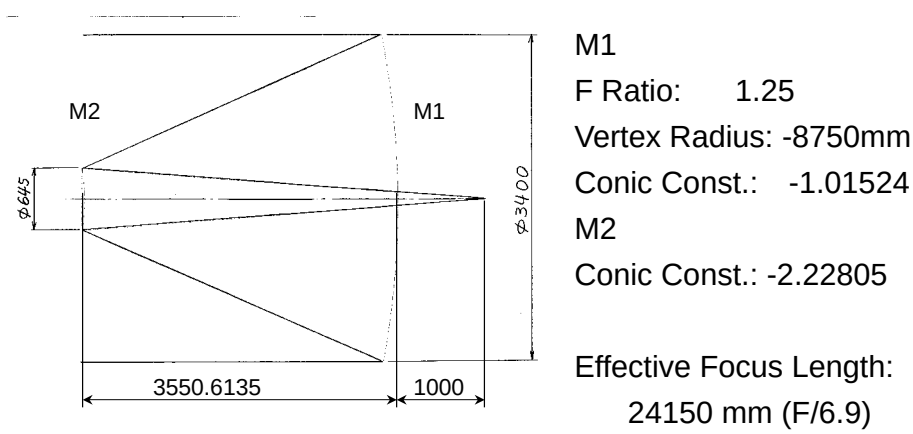

Fig. 2: Proposed Optical System

4.2 Optical Performances at Design

The Strehl ratio at design of the Ritchey-Cretien optical system at each wavelength and on and off axes conditions is calculated. The worst Strehl ratio at the wavelength applicable to the design goal is 0.985 at the edge of the field of view at 0.5 μm. This Strehl ratio corresponds to 0.02λ wave front error.

4.3 Wave Front Error Budget

In order to study the diffraction limited performance (the Strehl ratio of 0.8 or more at 5 μm wavelength), the wave front error budget as the first generation is created as shown in Figure 3, based on the zero-order estimate study. Using this error budget, the each distributed error should be studied quantitatively to assure its feasibility. The error budget will be revised in accordance with the progress of the feasibility study, if necessary.

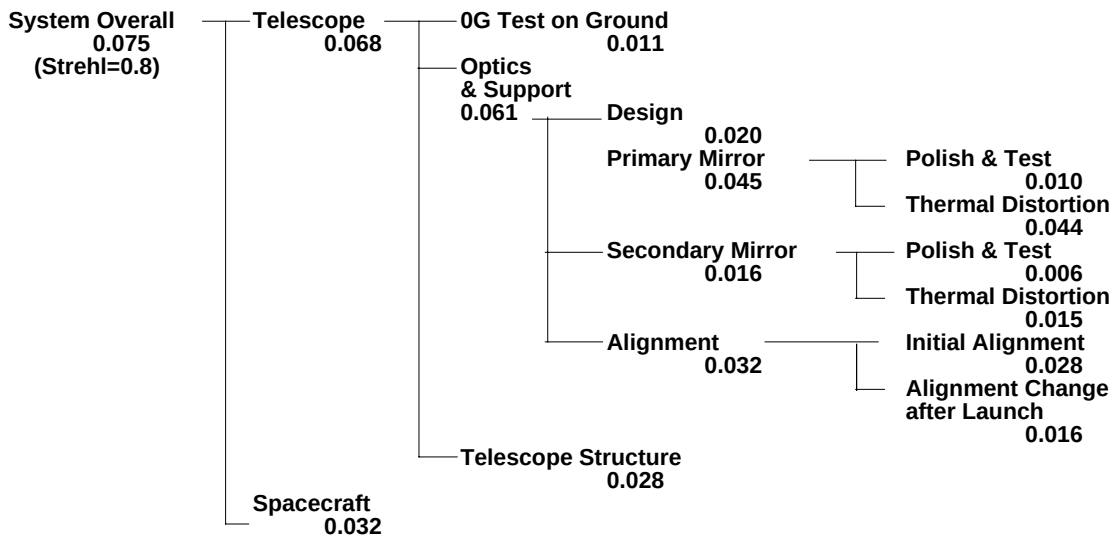

Fig. 3: Wave Front Error Budget (@ $\lambda = 5\mu$m)

5. PRIMARY MIRROR AND SUPPORT

It is always the case that the primary mirror (M1) and M1 support become the first fence to go beyond. The preliminary study to obtain at least one feasible concept of M1 and M1 support was therefore carried out.

5.1 Mirror Blank Material

Table 2 shows a summary of the comparison of candidate materials in the physical properties at the room temperature. Bearing in mind that the primary mirror will be cooled down to 4.5K, the mirror blank must have good thermal characteristics, while not-too-big development from the manufacturing view point is required. SiC and Be seem to be good material for use at cryogenic temperatures, but they also seem to possess a difficulty in the manufacturing process for this size.

In order to study the feasibility at the most conservative side from the manufacturing view point, Fused Silica which possesses the worst characteristics in thermal and strength aspects is selected as a base line at this stage.

Table 2: Comparison of Physical Properties

Material	Light –Weighting	Enlargement of Diameter	Thermal Distortion Sensitivity [a] $\alpha\lambda^{-1}C_{\mathrm{p}}\rho$	Bending Strength [b] $E[\rho g(1-\nu^2)]^{-1}$
SiC (Porous)	possible (by machining)	difficult	1.00	1.00
Be	possible (Hazardous Powder)	?	0.77	2.04
Fused Quarts Fused Silica	possible (by machining)	possible	2.22	0.43

[a] α is coefficient of thermal expansion, λ is thermal conductivity, and C_{p} is heat capacity.
[b] E is Young's modulus, ρ is density, g is gravitational constant, and ν is Poisson's ratio.

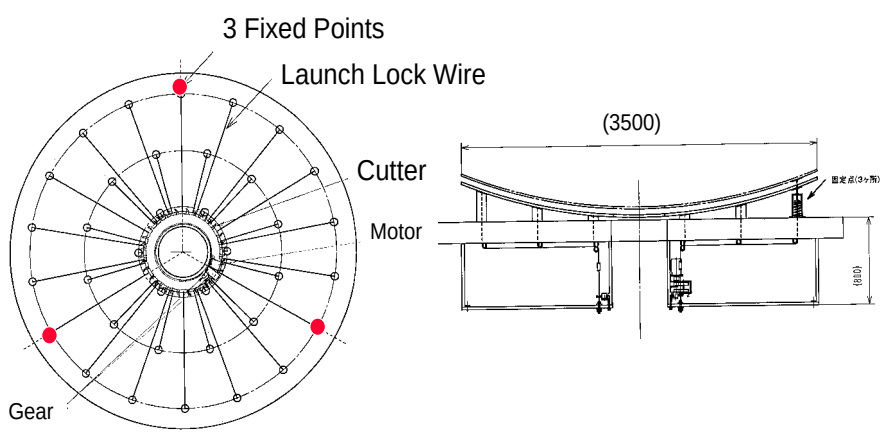

Fig. 4: Conceptual Drawings of M1 and M1 Support

5.2 M1 and M1 Support Concept

There are two light weighting methods of the Fused Silica mirror blank. One is the machine cored honeycomb structure and the other is the thin meniscus structure. The former has been widely used in the space programs, because it can maintain a bigger strength than the latter. The latter has been applied more in the ground-based telescopes, especially for large diameter mirror, 4 to 8m diameter class, with actively-controlled support systems (Enard 1994; Kaifu 1994; Stepp et al. 1994).

The machine cored Fused Silica mirror normally weighs at least 15% of the solid blank to prevent breaking during the machining process. At the 3.5m diameter mirror, the machine

cored mirror should be as heavy as more than 1 metric ton. This is more than a quarter of the total mass acceptable from the launch capacity, which would be unacceptable for the program. To pursue a lighter configuration of M1 and M1 support, an ultra-thin meniscus mirror was selected for the feasibility study.

Figure 4 shows the Conceptual Drawings of the M1 and M1 support, named as Multi Launch Locked Mirror (MLLM), comprising ultra-thin meniscus M1 and launch lock system with multi-point fixation devices at the back of the primary mirror. The ultra-thin meniscus mirror will be of 3500mm diameter, only 20mm thick and weighs only 500kg. The mirror will be pressed to the mirror cell, during the launch, at 36 points by wire launch lock mechanism or electro-magnet launch lock so that the stress at the mirror will be reduced to an acceptable range, less than 10Mpa. The launch lock will be released after reaching the Lagrange point and then M1 will be supported at three fixed points which constrain just 6 degrees of freedom.

5.3 M1 Figuring and Testing

M1 must be polished and figured on the ground. M1 will be deformed by both gravity and polishing lap pressure. In order to suppress the deformation to an acceptable range, in particular the interferometer testing, the mirror support system at this stage must be carefully planned. The following are the present candidates.

(1) Air bag support

(2) Fluid cans support

One can imagine how accurate support system at the M1 figuring and test must be. However, good experience exists for the mirror support system, both active and passive for ground based telescopes. Requiring more attention not for the flight instrument design, but for the ground instrument, is considered to be a wiser approach.

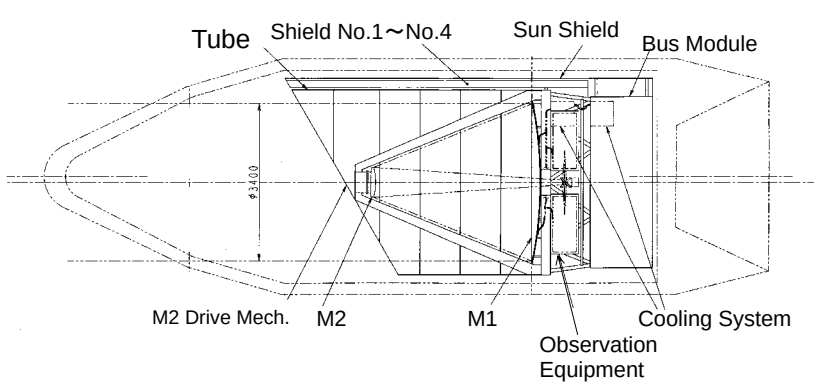

Fig. 5: Conceptual Drawings of HII/L2 in Fairing

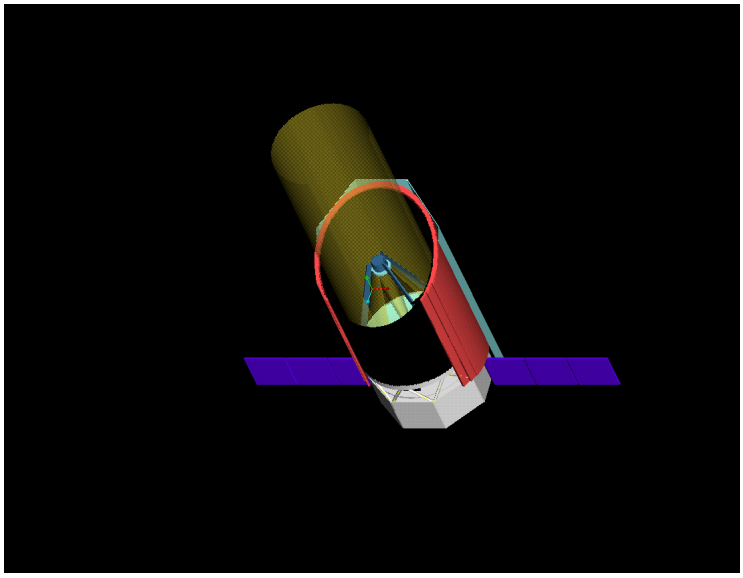

Fig. 6: Flight Image at L2 Point

Table 3: Mass Budget

	(Unit kg)
Thermal Shield Total	700
Sun Shield	125
Shield No.1	100
Shield No.2	105
Shield No.3	110
Shield No.4	260
Telescope Total	1410
Top Cover & Open Mech.	130
Secondary Mirror Unit	50
Tube Structure	400
Primary Mirror Unit	830
Observing Equipment	300
Cooling System	150
Reserve	440

6. CONCEPTUAL DRAWING OF HII/L2 SYSTEM AND MASS BUDGET

The conceptual drawing of HII/L2, using the ultra-thin M1 and MLLM, in the fairing is shown in Figure 5. Thanks to the moderately fast focus of M1, the height of the telescope can be within the dynamic envelope of the applicable fairing. The flight image of HII/L2 at the

Lagrange Point 2 is also shown in Figure 6.

The size of each component shown in Figure 5 was determined by analyzing the strength and mass of each component under 20G static load to X-Y-Z directions. This static load assumes 3 times of the RMS acceleration which will be calculated as the transfer of the power spectrum density from the satellite coupling base. Based on the Figure 5, the mass budget was created as shown in Table 3. Table 3 shows that total 4 metric ton for the entire system would be achievable.

7. SUMMARY

The preliminary study carried out so far for the HII/L2 telescope is presented. The study indicates a possibility to introduce an ultra-thin meniscus mirror with a multiple launch lock device. In addition, there is an interesting possibility of introducing low expansion glass material, such as Fused Silica and Zerodure, to the cooled space telescope of this size. Although the thermal distortion of M1 due to the CTE (Coefficient of Thermal Expansion) inhomogeneity in the mirror blank is yet to be analyzed, a better prospect than the relatively new materials, such as SiC and CVD SiC, is expected in the design phase.

REFERENCES

Enard, D. 1994, SPIE Proc., 2199, 394
Kaifu, N. 1994, SPIE Proc., 2199, 56
National Space Development Agency of Japan 1997, HIIA User's Manual 2nd ed. (Tokyo: NASDA)
Stepp, L., Huang E., & Cho, M. 1994, SPIE Proc., 2199, 223